FG0240



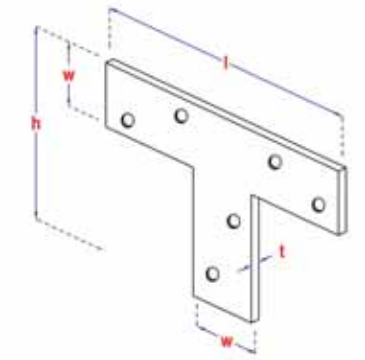

LABELED PER PIECE



T-ridge
T-verbindingsplaat

Equerre modèle T
T-winkel

GZ Yellow zinc plated

Art. Nr.	EAN Code	W [mm]	h [mm]	l [mm]	t [mm]	Hole pattern Dia. of the hole/nr. of holes	
FG02400020700505	5410439342742	16	70	50	2	Ø4/6	100

FG0241



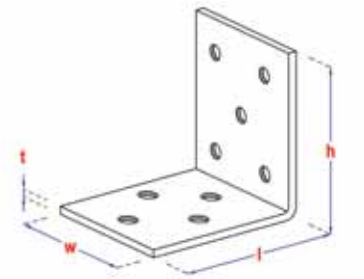

LABELED PER PIECE

ETA

DoPn° FG236001A



Assembly square multi holes
Versterkingshoek multigaten

Equerre multi-trous
Lochplattenwinkel

SZ Sendzimir Zinc Plated

Art. Nr.	EAN Code	w [mm]	l [mm]	t [mm]	h [mm]	Hole pattern Dia. of the hole/nr. of holes	
FG02410010400605	5410439360234	40	60	2.5	60	Ø5/9	100
FG02410010500605	5410439360159	50	60	2.5	60	Ø5/7 - Ø5/8	100
FG02410010600405	5410439322614	60	40	2.5	40	Ø5/5 - Ø5/5	100
FG02410010600605	5410439360258	60	60	2.5	60	Ø5/8 - Ø5/7	100
FG02410010600805	5410439322713	60	80	2.5	80	Ø5/10 - Ø5/10	50
FG02410010601005	5410439322751	60	100	2.5	100	Ø5/13 - Ø5/12	50
FG02410010800605	5410439360173	80	60	2.5	60	Ø5/11 - Ø5/10	50
FG02410010800805	5410439322737	80	80	2.5	80	Ø5/14 - Ø5/14	50
FG02410010801005	5410439360210	80	100	2.5	100	Ø5/17 - Ø5/18	50
FG02410011000605	5410439322690	100	60	2.5	60	Ø5/14 - Ø5/13	50
FG02410011001005	5410439322775	100	100	2.5	100	Ø5/23 - Ø5/22	25